LACELA

Product: Orbital Sander Art. No. 201106

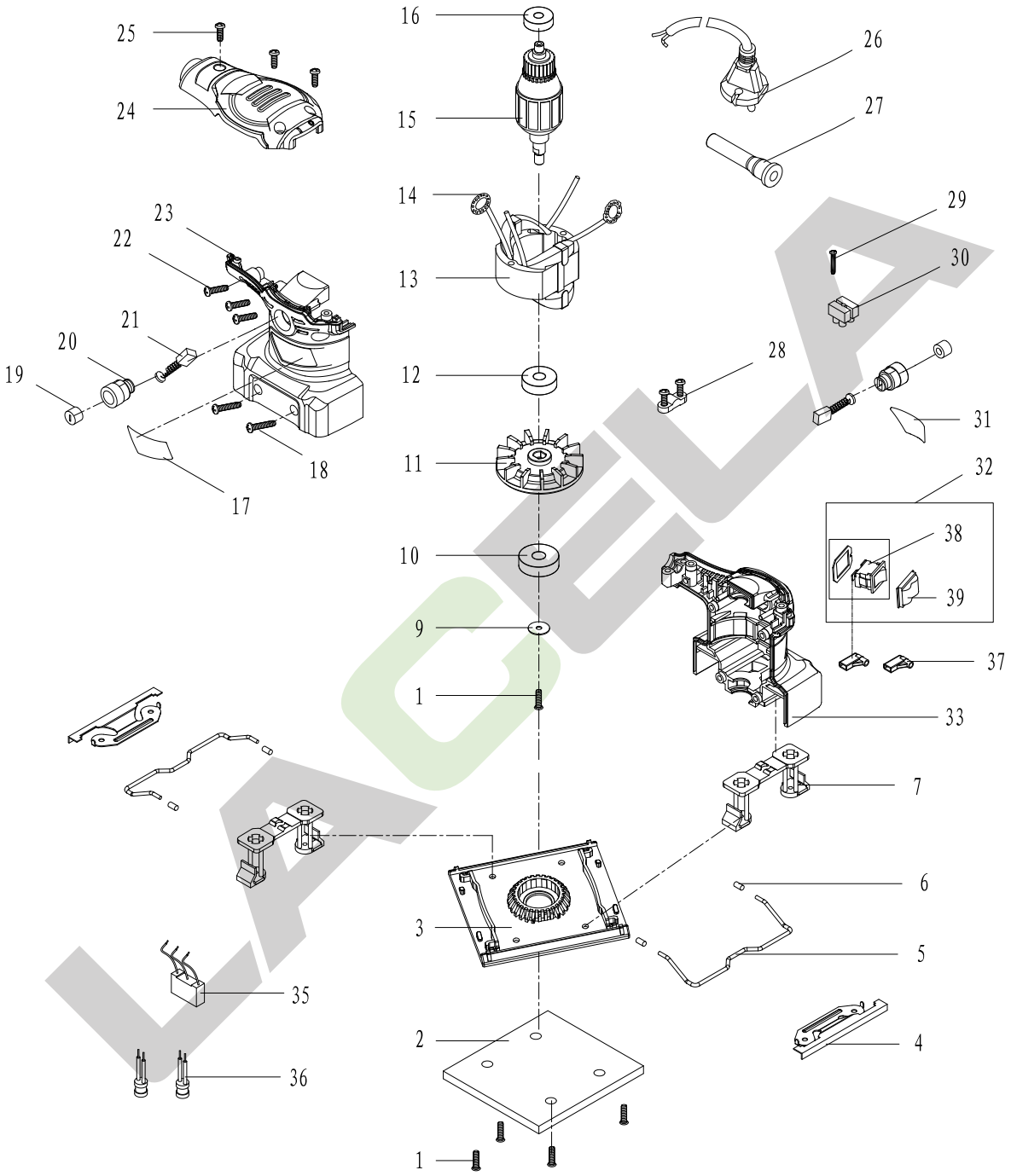

Version No.	D	Enable Time	2022.9

LACELA

Product:Orbital Sander Art.No.201106

No.	Part Name(Chinese)	Part Name(English)	Code	Qty	No.	Part Name(Chinese)	Part Name(English)	Code	Qty
1	沉头螺钉M4×12	Screw M4×12	30201009	5					
2	泡沫板	Froth plate	10401006030	1					
3	底板	Base plate	10101011277	1					
4	砂纸夹	Sand paper clamp	10304001058	2					
5	拨杆	Driving lever	10401003040	2					
6	拨钮帽	Dial button cap	10101007173	4					
7	弹性支架	Elastic bracket	10101010011	2					
9	平垫片5×15×2	Flat washer 5×15×2	30403115	1					
10	轴承6200	Bearing 6200	30103069	1					
11	风叶	Fan	10210002004	1					
12	轴承629	Bearing 629	30103137	1					
13	定子	Stator	10501001008	1					
14	拉簧	Tension Spring	10607001008	2					
15	转子	Armture	10502001009	1					
16	轴承627	Bearing 627	30103107	1					
17	铭牌	Nameplate	20302007475	1					
18	自攻螺钉ST4×35	Screw ST4×35	30202039	2					
19	刷握盖	Brush Cap	10606001053	2					
20	刷握	Brush Holder	10606001157	2					
21	碳刷5×8	Carbon brush	10605001128	2					
22	自攻螺钉ST4×16	Screw ST4×16	30202022	3					
23	右机壳	Housing (right half)	10101002156	1					
24	上盖	Top cover	10101008100	1					
25	自攻螺钉ST4×14	Screw ST4×14	30202019	3					
26	电源线2×0.75	Cord 2×0.75	10602006148	1					
27	电缆护套	Cable cover	10102001031	1					
28	电缆压板	Cable clamp	10101011123	1					
29	自攻螺钉ST3×16	Screw ST3×16	30202006	1					
30	塑料接线排3	Plastic wiring row	30802008	2					
31	商标	Trademark	20402007130	1					
32	开关组件	Switch complete	10701015082	1					
33	左机壳	Housing (left half)	10101002155	1					
35	电容	Capacitance	10603001025	1					
36	电感	Lnductance	10604001060	2					
37	保护套4.8	Protective Sheath 4.8	30802012	2					
38	开关	Switch	10601001287	1					
39	开关帽	Switch cap	10102004132	1					
Version No.		D			Enable Time		2022.9		

LACELA